# GIA

GIA REPORT
2225875304

Verify this report at GIA.edu

## GIA NATURAL COLORED DIAMOND REPORT

April 10, 2023

Report Type ..... Grading Report

GIA Report Number ..... 2225875304

Shape and Cutting Style ..... Cushion Modified Brilliant

Measurements ..... 7.99 x 7.09 x 4.25 mm

Carat Weight ..... 2.01 carat

Color Grade ..... Faint Yellow-Green

Color Origin ..... Natural

Color Distribution ..... Not Applicable

Clarity Grade ..... I1

Proportions:

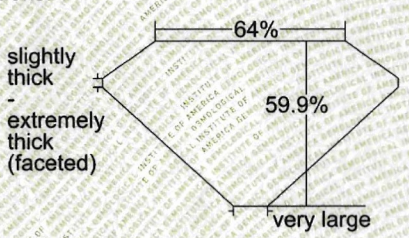


Profile not to actual proportions

Polish ..... Good

Symmetry ..... Good

Fluorescence ..... Faint

**Comments:** Pinpoints are not shown. Surface graining is not shown.



## ADDITIONAL INFORMATION

GIA COLORED DIAMOND SCALE

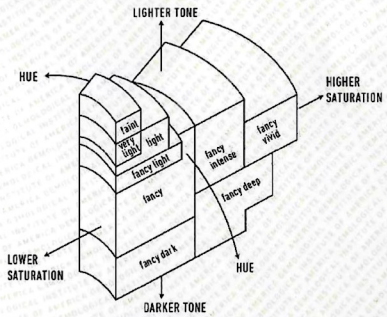


Illustration of GIA fancy color grade interrelationships

GIA CLARITY SCALE

| | |
|---|---|
| | FLAWLESS |
| | INTERNALLY FLAWLESS |
| VERY VERY SLIGHTLY INCLUDED | $VVS_1$ |
| | $VVS_2$ |
| VERY SLIGHTLY INCLUDED | $VS_1$ |
| | $VS_2$ |
| SLIGHTLY INCLUDED | $SI_1$ |
| | $SI_2$ |
| INCLUDED | $I_1$ |
| | $I_2$ |
| | $I_3$ |

CLARITY CHARACTERISTICS

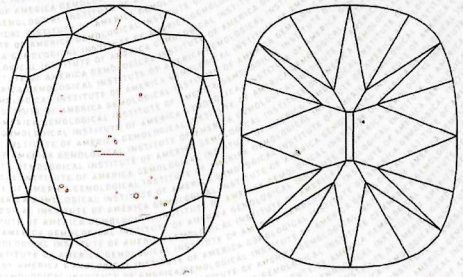

KEY TO SYMBOLS*

Feather

Crystal

* Red symbols denote internal characteristics (inclusions). Green or black symbols denote external characteristics (blemishes). Diagram is an approximate representation of the diamond, and symbols shown indicate type, position, and approximate size of clarity characteristics. All clarity characteristics may not be shown. Details of finish are not shown.

The results documented in this report refer only to the diamond described, and were obtained using the techniques and equipment available to GIA at the time of examination. This report is not a guarantee or valuation. For additional information and important limitations and disclaimers, please see GIA.edu/terms or call +1 800 421 7250 or +1 760 603 4500.

©2022 Gemological Institute of America, Inc.

reportcheck.gia.edu

THE SECURITY FEATURES IN THIS DOCUMENT, INCLUDING THE HOLOGRAM, SECURITY SCREEN AND MICROPRINT LINES, IN ADDITION TO THOSE NOT LISTED, EXCEED DOCUMENT SECURITY INDUSTRY GUIDELINES.

2001491706